LINC INPUT WIRING EXAMPLES

LOCAL INTELLIGENCE NODE CONTROLLER - ANALOG AND DIGITAL INPUTS

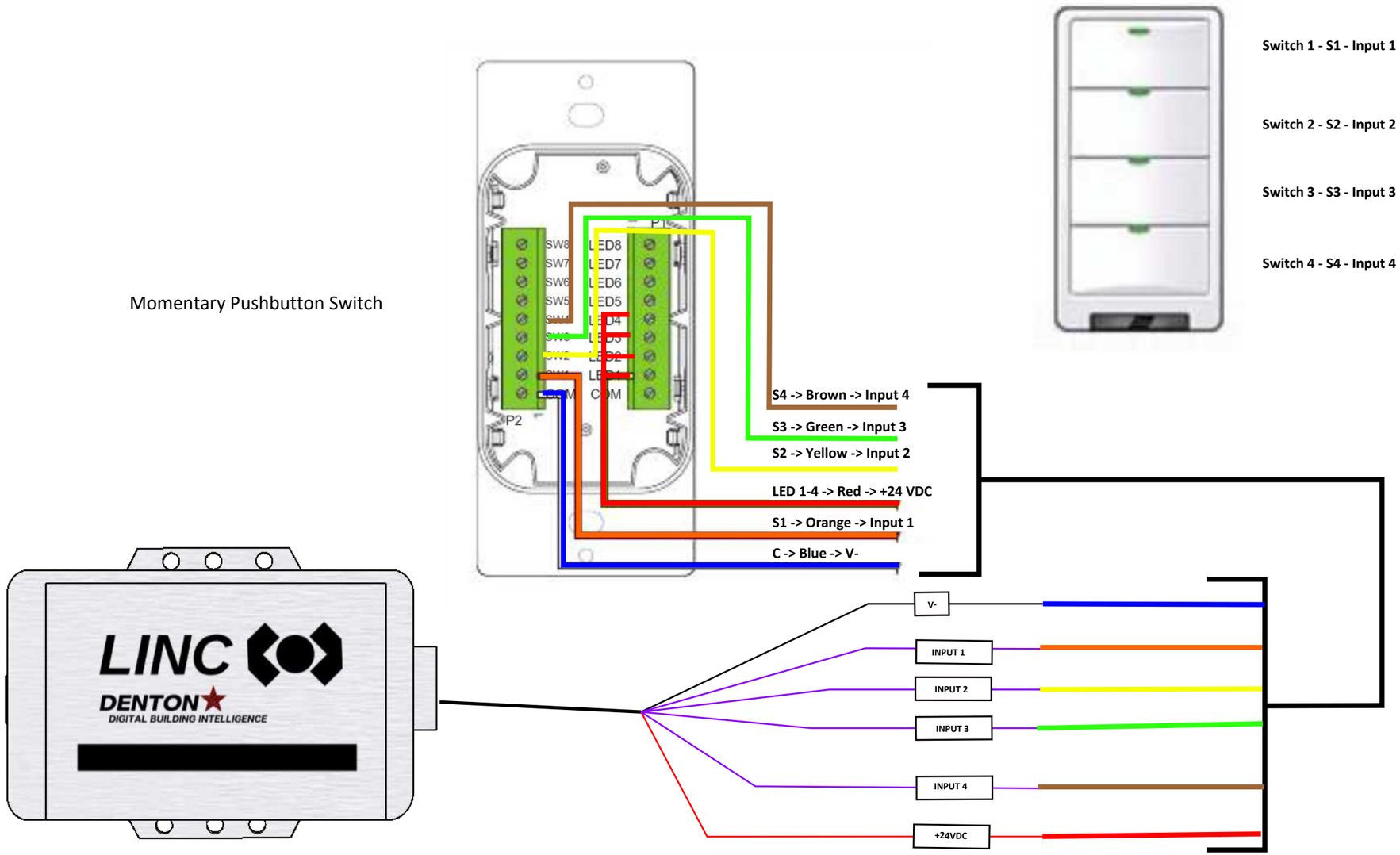

PoE Texas

Denton DBI Product Detail Drawings

3616 Far West Blvd
Suite 117-294
Austin TX 78731

DATE:
November 3, 2022

TITLE:
LINC INPUT WIRING EXAMPLE 1

DRAWING NUMBER:

OT-09